Reset

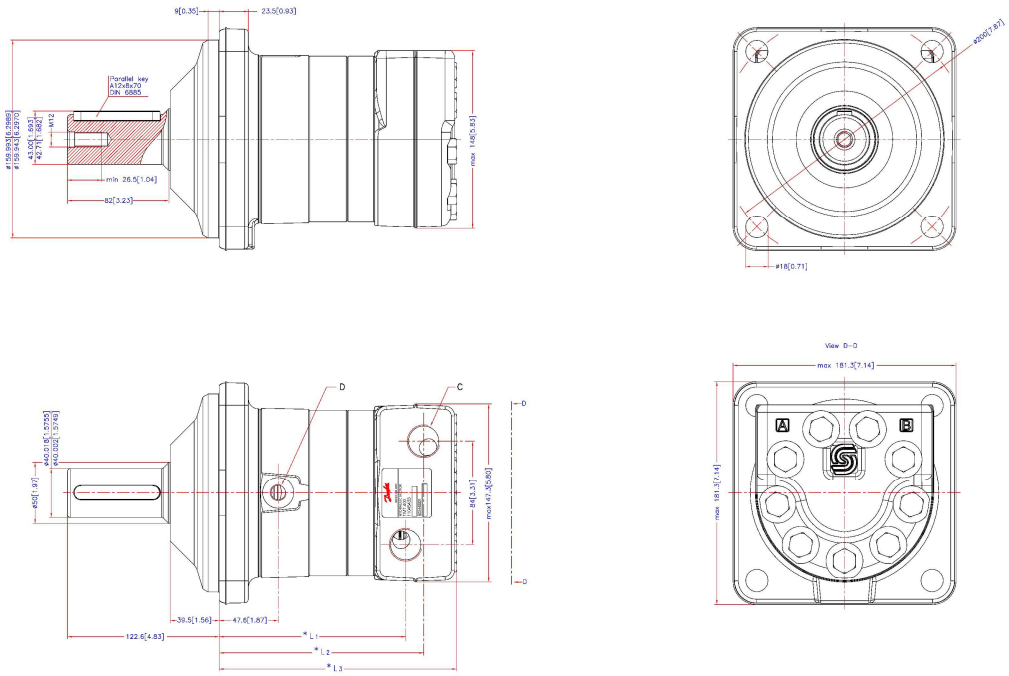

Code Number	CCM	* L 1 mm./inch.	* L 2 mm./inch.	* L 3max mm./inch.
151Z3010	250	150.5[5.93]	165.0[6.50]	max. 195.0[7.68]
151Z3011	315	159.7[6.29]	174.2[6.86]	max. 204.2[8.04]
151Z3012	400	170.2[6.70]	184.7[7272]	max. 214.7[8.45]
151Z3013	470	178.5[7.03]	193.0[7.60]	max. 223.0[8.78]
151Z3014	500	170.2[6.70]	184.7[7272]	max. 214.7[8.45]
151Z3015	630	184.2[7.25]	198.7[7.82]	max. 228.7[9.00]

C: G 3/4; 17[0.67] deep
D: Drain connection
G 1/4; 18[0.71] deep

Tolerance for basic dimensions = ±1 mm (0.04 inch)

Altered	Reason	Date
–	–	–

Scale 1:1
Projection
Date 2014.02.11
Design ASJ
Approv.

Confidential. Property of Danfoss (Nordborg) A/S, Denmark. Not to be handed over to, copied or used by third party. Free or free dimensioned reproduction of contents to be authorized by Danfoss (Nordborg) A/S. Danfoss (Nordborg) A/S can accept no responsibility for possible errors or drawings. Danfoss (Nordborg) A/S reserves the right to alter product already on order if provided that such alterations can be made without substantial changes being necessary to specifications already agreed.

TMT
Ø40 mm. cyl.
No. 8_151D1028